SPRING SPECIFICATION
BELLEVILLE

SPRING DIMENSIONS

	Nominal	+Tolerance	-Tolerance
OD	1.550	0.005	0.005
ID	1.025	0.005	0.005
h	0.040	REF	
THICKNESS	0.024	0.002	0.002

SPRING GEOMETRY

Parallelism

Concentricity

SPRING LOADS & HEIGHTS

		+Tolerance	-Tolerance
Hfree	0.064	0.004	0.002
Hinstalled	0.040	REF	
H1	0.040	BASIC	
H2	–	BASIC	
Hflat	0.026	MAX	
P1 (LBS)	58.0	REF	
P2 (LBS)	–		
Pflat (LBS)	–	REF	

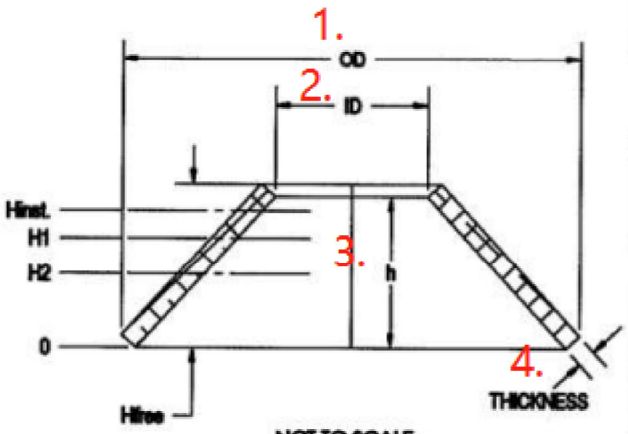

NOT TO SCALE

INTERFACE DIMENSIONS

OD, Shaft, MAX	–	MAX	(after hardcoat)
ID, Bore, MIN	–	MIN	(after hardcoat)

MISC. REQUIREMENTS

MATERIAL 301 SS, FULL HARD

SURFACE TREATMENT	PASSIVATE
N90	STATIC
COMPRESS TO FLAT	NO
PAINT	NO
TUMBLE DEBURR	YES

SCALE: D.N.S.	REV	DATE	INITIALS
PRINT DRAWN	1	1/31/91	DMH
12/8/87 RJM	2	3/29/95	DJK
PRINT APPROVED	3	1/7/99	DJK
4/12/99			

DESIGN ENGINEER

F04-0035-03 REV00

ITEM: F10090	SHEET 1 OF 1	DESCR: SPRING, BELLEVILLE

FILE: \\F10090

F04-0035-02 REV00